KBR Energy Management

Operating Instructions
Technical Parameters

multisys

1D3-ESDP

Your Partner for Network Analyzing

KBR GmbH
Am Kiefernschlag 7
D-91126 Schwabach

T +49 (0) 9122 6373-0
F +49 (0) 9122 6373-83
E info@kbr,de

www.kbr.de

Dear Customer

We would like to thank you for choosing a KBR GmbH quality product.

In order to familiarize yourself with the operation and programming of the device and always be able to use the whole functionality of this high-quality product, we recommend that you read this manual thoroughly.
The individual chapters serve to explain the technical details of the device and show how to avoid damage by means of proper installation and commissioning.

The manual is included in the scope of delivery of the device and must be accessible for the user at all times (e.g. in the switchgear cabinet). Even when the device is resold to third parties, the manual remains part of the device.

Although we used the utmost care in assembling this manual, we would like to thank you in advance for notifying us about any errors or ambiguous descriptions that might be in it. You will find a form for corrections in the appendix.

Sincerely,

KBR GmbH Schwabach

Safety Precautions

This manual contains notes that must be observed for your personal safety and to avoid damage to equipment. Notes are identified by a warning sign or an info symbol according to the degree of hazard they represent.

Danger

means that death, major injuries or damage **will** occur in case the appropriate safety measures are not performed.

Warning

means that death, major injuries or damage **may** occur in case the appropriate safety measures are not performed.

Caution

means that minor injuries or damage may occur in case the appropriate safety measures are not performed.

Note

is an important information on the product, product handling or the respective part of the user manual to which special reference is made.

Disclaimer

The contents of this manual has been checked with the described hardware and software components. Certain deviations, however, cannot be excluded, so the manufacturer is not liable for complete conformity. The specifications made in this manual are checked on a regular basis, necessary corrections are included in the next revision.
We appreciate your corrections and comments.

© KBR-GmbH
Subject to change

General Safety Precautions

In order to prevent operating errors, handling of the device is kept as simple as possible. This way, you will be able to use the device very soon.

In your own interest, however, you should read the following safety precautions carefully.

Warning

During installation, the applicable DIN / VDE regulations must be observed!

Mains connection, setup and operation of the device must only be performed by qualified personnel. Qualified personnel as understood in the safety precautions of this manual are persons authorized to setup, ground and mark equipment, systems and wiring systems in accordance with applicable standards.

To avoid the hazard of fire and electrical shock, the device must not be subjected to rain or other humidity!

Before the device is connected to the mains, you will have to check whether the local mains conditions comply with the specifications on the manufacturer's label. A wrong connection may destroy the device!

When connecting the device, the connection chart must be observed (see chapter "Connection chart") and the connection lines must be powerless. Only use proper line material and watch the correct polarity when wiring!

In order to ensure proper and safe operation of the product, it must be transported, stored, installed and mounted in accordance with the specifications and operated and maintained carefully.

A device showing visible damage must by all means be considered as unfit for operation and must be disconnected from the mains!

Error detection, repairs and maintenance work may only be carried out in our facilities or after contacting our service team. Every warranty obligation of the manufacturer expires if the device is opened without written consent from our service team. Proper operation can no longer be guaranteed!

Opening the device may expose parts under voltage. Capacitors in the device may still be loaded even if the device was disconnected from all voltage sources. It is generally not allowed to operate the open device!

In facilities subject to hazard of lightning, lightning protection must be provided for all input and output lines (recommendations see chapter "Protective measures")!

Product Liability

With these product, you have acquired a quality product.

In its manufacture, only components of the highest reliability and quality were used. Each device is subject to long-term testing before it is delivered.

For information on product liability, please refer to our General Terms and Conditions for electronic devices**.**

The warranted properties of the device apply only if it is operated in accordance with its intended use!

Disposal

Please dispose of defective, outdated or no longer used devices properly.
At your request, we will be pleased to dispose of the devices for you.

Table of Contents

EDEBDA0055 / 4210-1 GB

1 Description

The KBR ***MULTIGATE-Profibus*** / **multisys 1D3-ESDP** connects the KBR energy bus to a Profibus. The two interfaces are isolated galvanically from each other.
The gateway allows the **KBR multimess 1F96-0-LED-ES-US1**, **multicount basic LCD bus**, ***BK12 Basic*** or a **multicomp 96 LCD bus** to be read out via the Profibus. Communication between the device and the gateway takes place via the KBR Energy Bus. Either a **multimess 1F96-0-LED-ES-US1**, **multicount basic LCD bus** ***BK12 Basic*** or a **multicomp 96 LCD bus** can be connected with the fixed energy bus address 1. The Profibus address can be configured via DIP switches on the gateway. The gateway here is configured as the master on the energy bus side, generates a memory map for the corresponding device and makes this available as data points for the Profibus. The number and type of the data points can be conveniently configured via the GSD file.

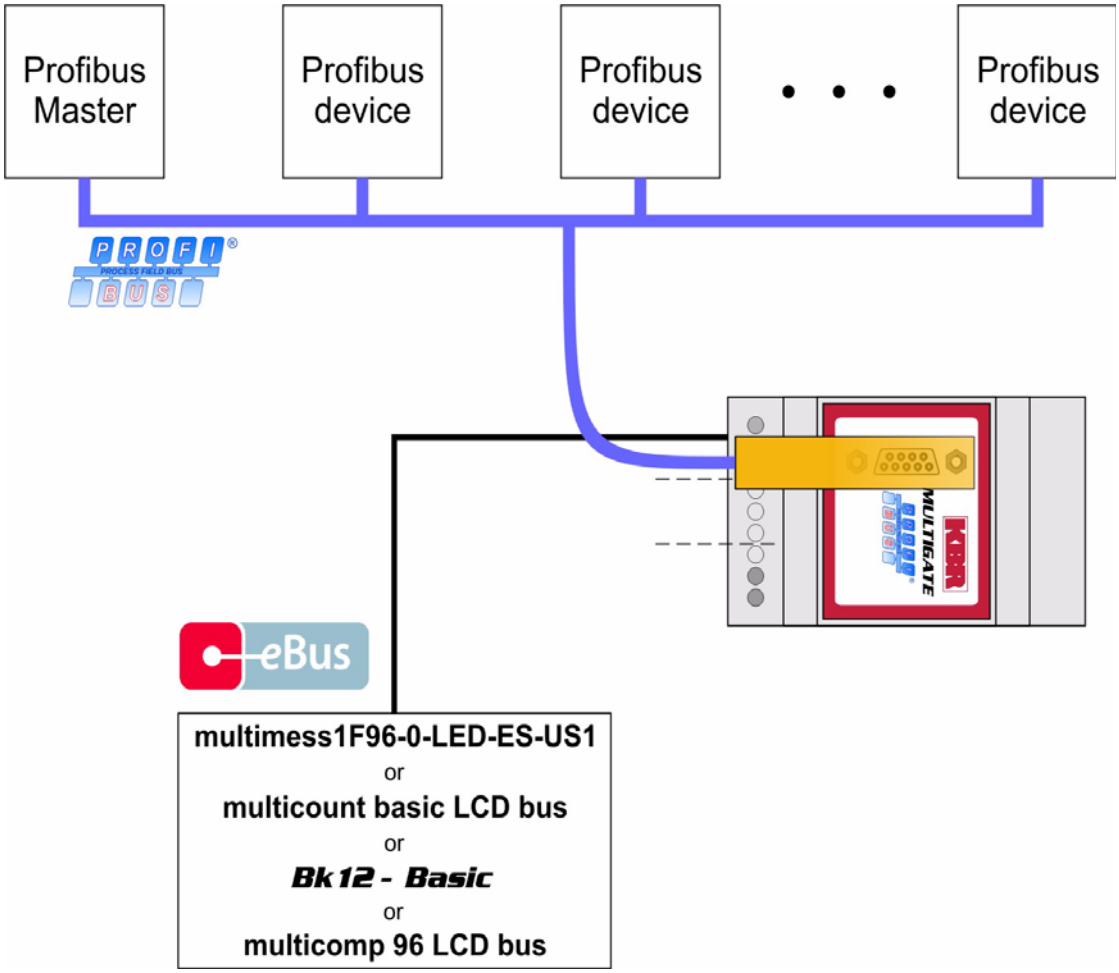

Figure 1: Principal system design

2 Function

The ***MULTIGATE-Profibus*** / **multisys 1D3-ESDP** continually polls its connected **multimess 1F96-0-LED-ES-US1**, **multicount basic LCD bus, *BK12 Basic*** or **multicomp 96 LCD bus** to receive its measured values. It then saves these in the internal memory. The measured values are now ready for retrieval by the Profibus. After the device has been configured by a Profibus master, it makes available the values in the cyclic data exchange.

3 Connection

The power supply for the ***MULTIGATE-Profibus*** / **multisys 1D3-ESDP**is provided by a power pack with 24V AC/DC supplied by the customer. 24V are connected to the 24V AC/DC input.
The Energy Bus is wired up in accordance with the KBR eBus guideline. Connection to the Profibus DP network is estabilshed via 9-pole standard Profibus plugs.

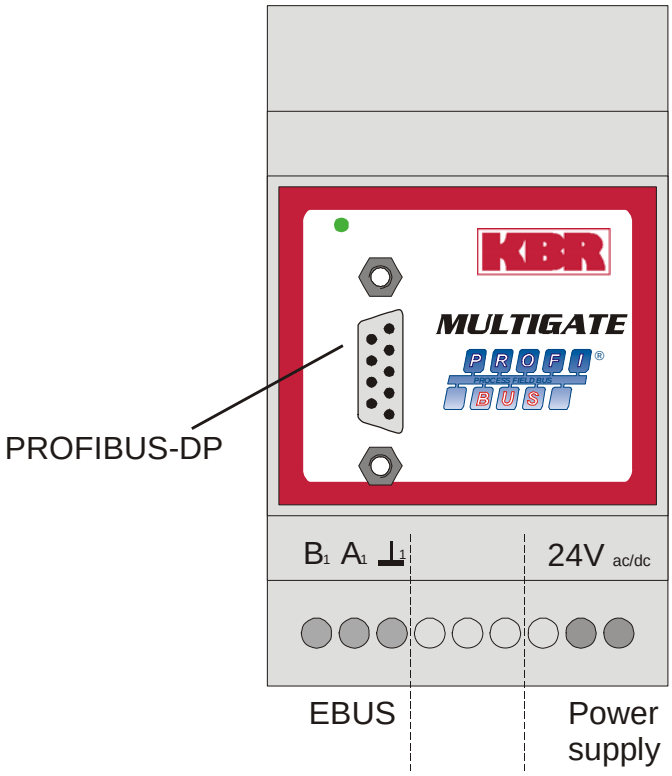

Figure 2: Pin assignment

4 Configuration

On the side of the housing opposite the connections the DIP switch S1 is located under a cover. This is used to set the Profibus address:

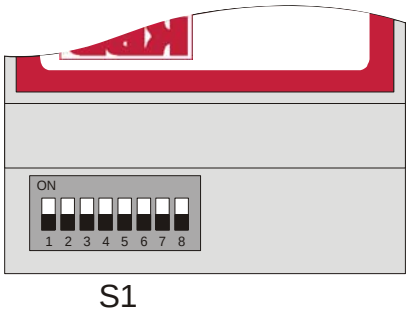

Figure 3: DIP switch for parametrization

Note: Changes may only be made to the configuration when the unit is switched off.

4.1 Profibus address

The DIP switch S1 is used to set the Profibus address. It can be set in the range from 1 to 125.

DIP switch 1								Profibus address
1	2	3	4	5	6	7	8	
OFF	OFF	OFF	OFF	OFF	OFF	OFF	ON	1
OFF	OFF	OFF	OFF	OFF	OFF	ON	OFF	2
OFF	OFF	OFF	OFF	OFF	OFF	ON	ON	3
OFF	OFF	OFF	OFF	OFF	ON	OFF	OFF	4
OFF	OFF	OFF	OFF	OFF	ON	OFF	ON	5
OFF	OFF	OFF	OFF	OFF	ON	ON	OFF	6
OFF	OFF	OFF	OFF	OFF	ON	ON	ON	7
OFF	OFF	OFF	OFF	ON	OFF	OFF	OFF	8
OFF	OFF	OFF	OFF	ON	OFF	OFF	ON	9
OFF	OFF	OFF	OFF	ON	OFF	ON	OFF	10
OFF	OFF	OFF	OFF	ON	OFF	ON	ON	11
OFF	OFF	OFF	OFF	ON	ON	OFF	OFF	12
OFF	OFF	OFF	OFF	ON	ON	OFF	ON	13
OFF	OFF	OFF	OFF	ON	ON	ON	OFF	14
OFF	OFF	OFF	OFF	ON	ON	ON	ON	15
OFF	OFF	OFF	ON	OFF	OFF	OFF	OFF	16
OFF	OFF	OFF	ON	OFF	OFF	OFF	ON	17
OFF	OFF	OFF	ON	OFF	OFF	ON	OFF	18
OFF	OFF	OFF	ON	OFF	OFF	ON	ON	19
OFF	OFF	OFF	ON	OFF	ON	OFF	OFF	20
OFF	OFF	OFF	ON	OFF	ON	OFF	ON	21
OFF	OFF	OFF	ON	OFF	ON	ON	OFF	22
OFF	OFF	OFF	ON	OFF	ON	ON	ON	23
OFF	OFF	OFF	ON	ON	OFF	OFF	OFF	24
OFF	OFF	OFF	ON	ON	OFF	OFF	ON	25
OFF	OFF	OFF	ON	ON	OFF	ON	OFF	26
OFF	OFF	OFF	ON	ON	OFF	ON	ON	27
OFF	OFF	OFF	ON	ON	ON	OFF	OFF	28
OFF	OFF	OFF	ON	ON	ON	OFF	ON	29
OFF	OFF	OFF	ON	ON	ON	ON	OFF	30
OFF	OFF	OFF	ON	ON	ON	ON	ON	31
OFF	OFF	ON	OFF	OFF	OFF	OFF	OFF	32
OFF	OFF	ON	OFF	OFF	OFF	OFF	ON	33

Table 1: Profibus address

EDEBDA0055 / 4210-1 GB

DIP switch 1								Profibus address
1	2	3	4	5	6	7	8	
OFF	OFF	ON	OFF	OFF	OFF	ON	OFF	34
OFF	OFF	ON	OFF	OFF	OFF	ON	ON	35
OFF	OFF	ON	OFF	OFF	ON	OFF	OFF	36
OFF	OFF	ON	OFF	OFF	ON	OFF	ON	37
OFF	OFF	ON	OFF	OFF	ON	ON	OFF	38
OFF	OFF	ON	OFF	OFF	ON	ON	ON	39
OFF	OFF	ON	OFF	ON	OFF	OFF	OFF	40
OFF	OFF	ON	OFF	ON	OFF	OFF	ON	41
OFF	OFF	ON	OFF	ON	OFF	ON	OFF	42
OFF	OFF	ON	OFF	ON	OFF	ON	ON	43
OFF	OFF	ON	OFF	ON	ON	OFF	OFF	44
OFF	OFF	ON	OFF	ON	ON	OFF	ON	45
OFF	OFF	ON	OFF	ON	ON	ON	OFF	46
OFF	OFF	ON	OFF	ON	ON	ON	ON	47
OFF	OFF	ON	ON	OFF	OFF	OFF	OFF	48
OFF	OFF	ON	ON	OFF	OFF	OFF	ON	49
OFF	OFF	ON	ON	OFF	OFF	ON	OFF	50
OFF	OFF	ON	ON	OFF	OFF	ON	ON	51
OFF	OFF	ON	ON	OFF	ON	OFF	OFF	52
OFF	OFF	ON	ON	OFF	ON	OFF	ON	53
OFF	OFF	ON	ON	OFF	ON	ON	OFF	54
OFF	OFF	ON	ON	OFF	ON	ON	ON	55
OFF	OFF	ON	ON	ON	OFF	OFF	OFF	56
OFF	OFF	ON	ON	ON	OFF	OFF	ON	57
OFF	OFF	ON	ON	ON	OFF	ON	OFF	58
OFF	OFF	ON	ON	ON	OFF	ON	ON	59
OFF	OFF	ON	ON	ON	ON	OFF	OFF	60
OFF	OFF	ON	ON	ON	ON	OFF	ON	61
OFF	OFF	ON	ON	ON	ON	ON	OFF	62
OFF	OFF	ON	ON	ON	ON	ON	ON	63
OFF	ON	OFF	OFF	OFF	OFF	OFF	OFF	64
OFF	ON	OFF	OFF	OFF	OFF	OFF	ON	65
OFF	ON	OFF	OFF	OFF	OFF	ON	OFF	66
OFF	ON	OFF	OFF	OFF	OFF	ON	ON	67
OFF	ON	OFF	OFF	OFF	ON	OFF	OFF	68
OFF	ON	OFF	OFF	OFF	ON	OFF	ON	69
OFF	ON	OFF	OFF	OFF	ON	ON	OFF	70
OFF	ON	OFF	OFF	OFF	ON	ON	ON	71
OFF	ON	OFF	OFF	ON	OFF	OFF	OFF	72
OFF	ON	OFF	OFF	ON	OFF	OFF	ON	73
OFF	ON	OFF	OFF	ON	OFF	ON	OFF	74
OFF	ON	OFF	OFF	ON	OFF	ON	ON	75
OFF	ON	OFF	OFF	ON	ON	OFF	OFF	76
OFF	ON	OFF	OFF	ON	ON	OFF	ON	77
OFF	ON	OFF	OFF	ON	ON	ON	OFF	78
OFF	ON	OFF	OFF	ON	ON	ON	ON	79
OFF	ON	OFF	ON	OFF	OFF	OFF	OFF	80
OFF	ON	OFF	ON	OFF	OFF	OFF	ON	81
OFF	ON	OFF	ON	OFF	OFF	ON	OFF	82
OFF	ON	OFF	ON	OFF	OFF	ON	ON	83
OFF	ON	OFF	ON	OFF	ON	OFF	OFF	84

Table 1: Profibus address (cont.)

DIP switch 1								Profibus address
1	2	3	4	5	6	7	8	
OFF	ON	OFF	ON	OFF	ON	OFF	ON	85
OFF	ON	OFF	ON	OFF	ON	ON	OFF	86
OFF	ON	OFF	ON	OFF	ON	ON	ON	87
OFF	ON	OFF	ON	ON	OFF	OFF	OFF	88
OFF	ON	OFF	ON	ON	OFF	OFF	ON	89
OFF	ON	OFF	ON	ON	OFF	ON	OFF	90
OFF	ON	OFF	ON	ON	OFF	ON	ON	91
OFF	ON	OFF	ON	ON	ON	OFF	OFF	92
OFF	ON	OFF	ON	ON	ON	OFF	ON	93
OFF	ON	OFF	ON	ON	ON	ON	OFF	94
OFF	ON	OFF	ON	ON	ON	ON	ON	95
OFF	ON	ON	OFF	OFF	OFF	OFF	OFF	96
OFF	ON	ON	OFF	OFF	OFF	OFF	ON	97
OFF	ON	ON	OFF	OFF	OFF	ON	OFF	98
OFF	ON	ON	OFF	OFF	OFF	ON	ON	99
OFF	ON	ON	OFF	OFF	ON	OFF	OFF	100
OFF	ON	ON	OFF	OFF	ON	OFF	ON	101
OFF	ON	ON	OFF	OFF	ON	ON	OFF	102
OFF	ON	ON	OFF	OFF	ON	ON	ON	103
OFF	ON	ON	OFF	ON	OFF	OFF	OFF	104
OFF	ON	ON	OFF	ON	OFF	OFF	ON	105
OFF	ON	ON	OFF	ON	OFF	ON	OFF	106
OFF	ON	ON	OFF	ON	OFF	ON	ON	107
OFF	ON	ON	OFF	ON	ON	OFF	OFF	108
OFF	ON	ON	OFF	ON	ON	OFF	ON	109
OFF	ON	ON	OFF	ON	ON	ON	OFF	110
OFF	ON	ON	OFF	ON	ON	ON	ON	111
OFF	ON	ON	ON	OFF	OFF	OFF	OFF	112
OFF	ON	ON	ON	OFF	OFF	OFF	ON	113
OFF	ON	ON	ON	OFF	OFF	ON	OFF	114
OFF	ON	ON	ON	OFF	OFF	ON	ON	115
OFF	ON	ON	ON	OFF	ON	OFF	OFF	116
OFF	ON	ON	ON	OFF	ON	OFF	ON	117
OFF	ON	ON	ON	OFF	ON	ON	OFF	118
OFF	ON	ON	ON	OFF	ON	ON	ON	119
OFF	ON	ON	ON	ON	OFF	OFF	OFF	120
OFF	ON	ON	ON	ON	OFF	OFF	ON	121
OFF	ON	ON	ON	ON	OFF	ON	OFF	122
OFF	ON	ON	ON	ON	OFF	ON	ON	123
OFF	ON	ON	ON	ON	ON	OFF	OFF	124
OFF	ON	ON	ON	ON	ON	OFF	ON	125

Table 1: Profibus address (cont.)

EDEBDA0055 / 4210-1 GB

5 Commissioning

After the configuration and all the wiring have been successfully completed, the ***MULTIGATE-Profibus*** / **multisys 1D3-ESDP** can be put into operation. Here it should be ensured that the gateway is the final device to be switched on, or that the KBR eBus device and gateway are supplied with power at the the same time. The gateway can now be found on the Profibus under the address set, and it can be parametrized and configured via a suitable configuration tool.

6 Data formats

(**unsigned) short** :0x1234

Address	**+0**	**+1**
Contents	0x12	0x34

Table 2: unsigned short

Rule for byte sequence:
MSB before LSB

(unsigned) long:0x12345678

Address	**+0**	**+1**	**+2**	**+3**
Contents	0x12	0x34	0x56	0x78

Table 3: unsigned long

Rule for byte sequence:
MSB before LSB

float:

Format	corresponds to the IEEE 754 standard
Representation	4 bytes
Accuracy	24 bits (➢ represent >7 decimal points)
Composition	24-bit mantissa; 8-bit exponent
Mantissa	23 bits (M) + 1 bit (S) The MSB of the mantissa always amounts to 1 => it is not saved separately! S = sign for the mantissa: S = 1 ➢ negative number; S = 0 ➢ positive number
Exponent	8 bits (0-255); is saved relative to 127, ie. the current value of the exponent is deduced by subtracting the number 127 from the value saved. Curr. exp. = saved value of exp. – 127 => Number range from 128 to -127! Numeric range which can be represented: 1.18E-38 to 3.40E+38

Table 4: float

EDEBDA0055 / 4210-1 GB

Example 1: -12.5 decimal = 0xC1480000 hex
M: 24-bit mantissa
E: Exponent with an offset of 127
S: Sign for mantissa (S=1 neg.; S=0 pos.)

Address	**+0**	**+1**	**+2**	**+3**
Format	SEEEEEEE	EMMMMMMM	MMMMMMMM	MMMMMMMM
Binary	1 1 0 0 0 0 0 1	0 1 0 0 1 0 0 0	0 0 0 0 0 0 0 0	0 0 0 0 0 0 0 0
Hex	C1	48	00	00

Table 5: Example float -12.5

The byte sequence ist defined as follows:
The byte with the "S sign bit“ is transmitted as the first byte via the bus.
The sequence of the float bytes on the bus can be reversed, where required, using the "commands“ module (see table 1).

The following information can be derived from this illustration:
The sign bit is 1 => negative mantissa
The value of the exponent amounts to 10000010 bin or 130 dec.
This yields a value for the exponent of: 130 - 127 = 3
The mantissa contains the following value: 10010000000000000000000
The decimal point can be found at the left end of the mantissa, preceded by a 1. This position does not appear in the hexadecimal numeric notation. If you add 1 and set the decimal point at the beginning of the mantissa, you will obtain the following value:
1.10010000000000000000000
Now the mantissa must be adjusted to the exponent. A negative exponent shifts the decimal point to the left, a positive exponent shifts it to the right. Since the exponent is 3, this appears in our illustration as:
1100.10000000000000000000
The number obtained corresponds to the binary floating-point number.
Binary points to the left of the decimal point yield values > 1. In this example, 1100 bin yields the number 12 dec. $\{(1x2^3)+ (1x2^2)+ (0x2^1)+ (0x2^0)\}$
Binary points to the right of the decimal point yield values < 1. In this example, .100..... bin yields the number 0.5 dec. $\{(1x2^3)+ (1x2^{-1})+ (0x2^{-2})+ (0x2^{-3})\}$
By adding the individual values, 12.5 is obtained. Since the sign bit was set, this is a negative number, that is, -12.5. The hexadecimal number 0xC1480000 therefore corresponds to -12.5.

Example 2: -12.55155 decimal = 0xC148D325 hex

Address	**+0**	**+1**	**+2**	**+3**
Format	SEEEEEEE	EMMMMMMM	MMMMMMMM	MMMMMMMM
Binary	1 1 0 0 0 0 0 1	0 1 0 0 1 0 0 0	1 1 0 1 0 0 1 1	0 0 1 0 0 1 0 1
Hex	C1	48	D3	25

Table 6: Example float -12.55155

EDEBDA0055 / 4210-1 GB

Example 3: 45.354 decimal = 0x42356A7F hex

Address	**+0**	**+1**	**+2**	**+3**
Format	SEEEEEEE	EMMMMMMM	MMMMMMMM	MMMMMMMM
Binary	0 1 0 0 0 0 1 0	0 0 1 1 0 1 0 1	0 1 1 0 1 0 1 0	0 1 1 1 1 1 1 1
Hex	42	35	6A	7F

Table 7: Example float 45.354

Exponent: 10000100 bin = 132 dec.

- Exp.= 132-127=5

Mantissa: S=0

- VZ=positive

01101010110101001111111 bin

Decimal point added to the first position of the mantissa

- . 01101010110101001111111

Leading 1 before of decimal point

- 1. 01101010110101001111111

Taking exponent into account (=5)

- 101101. 010110101001111111

to the left of the decimal point: 101101 bin = $2^5 + 2^3 + 2^2 + 2^0$ = 45 dez.

to the right of the decimal point: 010110101001111111 bin =

$2^{-2} + 2^{-4} + 2^{-5} + 2^{-7} + 2^{-9} + 2^{-12} + 2^{-13} + 2^{-14} + 2^{-15} + 2^{-16} + 2^{-17} + 2^{-18}$ = 0.3540001 dec.

Final result: +45.3540001 dec

Time stamp time_t (is transmitted as unsigned long)
The time stamp describes a point in time. The value here is defined as follows:
Seconds since 1.1.1970 0°° hours (with respect to the appropriate time zone)
The values are transmitted via the bus as unsigned long (for byte sequence, see above). All values here are to be interpreted as standard time (winter time), ie. if you want to set the device clock in Germany to 11 o'clock in May, then the setting command via the bus must be given, by definition, with winter time 10 o'clock.

The following applies:
All time stamps which are transmitted via the bus are to be interpreted as standard (winter) time.

The device itself must be parametrized here in accordance with country-specific practices.
Possible settings here:
e.g.: Germany -> daylight saving time from end of March to end of October
e.g. China -> daylight saving time not activated

7 GSD file

The functionality of the device is described by the GSD file. The ***MULTIGATE Profibus*** **/ multisys 1D3-ESDP** represents its connected KBR device as a modular device.
By lining up the desired modules using the configuration data, the input and output data can be put together any way you like. The offfset for the respective values in the input data is derived from the length of the data formats specified in each case.
Depending on the device connected, a different GSD file is used. Detection takes place automatically. This means that if a **multimess 1F96-0-LED-ES-US1** is connected, for example, the gateway also announces itself as a **multimess 1F96-0-LED-ES-US1**. The configuration tool then provides the modules for selection for this device.

7.1 Example for integration into a Simatic S7-300 control

Since the 300-type controls from the Siemens company cannot process any consistent data of 3 or >4 bytes, the data have to be read using SFC14. This is the case for the **multimess 1F96-0-LED-ES-US1** and **multicount basic LCD bus** devices, because these all supply three-phase measured values as 12-byte modules. For the ***BK12 Basic*** it is not required to use SFC14, since all modules are 4 bytes in length (see first block in the example).

```
// In the hardware configurator the "Frequency" module was configured to the input address 24.
// This module is 4-bytes in length (consistent) and can therefore be
// evaluated immediately
      L     ED    24                    // Frequency
      T     MD    24

// The module "Voltage PH-N L1-L3" was configured to the input address 0 and
// the module "Current L1-L3" was configured to the input address 12.
// These modules each have 12 bytes of consistent length (3 * 4 bytes real) and can
// be read out using SFC14.

      CALL  "DPRD_DAT"                  // SFC 14
       LADDR  :=W#16#0                  // configured E-address of the module
       RET_VAL:=MW120                   // any measured value for possible error codes
       RECORD :=P#DB4.DBX0.0 BYTE 12    // Pointer target area of data

      L     DB4.DBD    0                // U L1
      T     MD    0

      L     DB4.DBD    4                // U L2
      T     MD    4

      L     DB4.DBD    8                // U L3
      T     MD    8

      CALL  "DPRD_DAT"                  // SFC 14
       LADDR  :=W#16#C                  // configured E-address of the module
       RET_VAL:=MW120                   // any measured value for possible error codes
       RECORD :=P#DB4.DBX12.0 BYTE 12    // Pointer target area of data

      L     DB4.DBD    12                // 1 L1
      T     MD    12

      L     DB4.DBD    16                // 1 L2
      T     MD    16

      L     DB4.DBD    20                // 1 L3
      T     MD    20
```

EDEBDA0055 / 4210-1 GB

8 multimess 1F96-0-LED-ES-US1

8.1 GSD file for multimess 1F96-0-LED-ES-US1

```
;-----------------------------------------------------------------------------;
; GSD Multimess 96 for PROFIBUS DP                                            ;
; Fa. KBR GmbH, Am Kiefernschlag 7 , 91126 Schwabach                          ;
; Tel.: 09122/6373-0                                                          ;
; Date: 30.04.2004                                                           ;
;-----------------------------------------------------------------------------;

#Profibus_DP
; <Prm-Text-Def-List>
PrmText=1
Text(0)= "do not rotate float/REAL"
Text(1)= "rotate float/REAL"
EndPrmText
; <Ext-User-Prm-Data-Def-List>
ExtUserPrmData=1 "float/REAL byte rotation"
Bit(0) 0 0-1
Prm_Text_Ref=1
EndExtUserPrmData
;
GSD_Revision        = 2

Vendor_Name         = "KBR GmbH, Schwabach"       ; company name
Model_Name          = "Multimess 96 Basic"        ; device name
Revision            = "1.0"                       ; device release
Ident_Number        = 0x08F7                      ; priliminary ident number
Protocol_Ident      = 0                           ; PROFIBUS_DP Protokoll
Station_Type        = 0                           ; slave station

Hardware_Release    = "V1.0"                      ;
Software_Release    = "V1.00"                     ;

9.6_supp            = 1                           ; Baudrate 9.6kB supported
19.2_supp           = 1                           ; Baudrate 19.2kB supported
93.75_supp          = 1                           ; Baudrate 93.75kB supported
187.5_supp          = 1                           ; Baudrate 187.5kB supported
500_supp            = 1                           ; Baudrate 500kB supported
1.5M_supp           = 1                           ; Baudrate 1.5MB supported
3M_supp             = 1                           ; Baudrate 3MB supported
6M_supp             = 1                           ; Baudrate 6MB supported
12M_supp            = 1                           ; Baudrate 12 MB supported

MaxTsdr_9.6         = 60
MaxTsdr_19.2        = 60
MaxTsdr_93.75       = 60
MaxTsdr_187.5       = 60
MaxTsdr_500         = 100
MaxTsdr_1.5M        = 150
MaxTsdr_3M          = 250
MaxTsdr_6M          = 450
MaxTsdr_12M         = 800

Freeze_Mode_supp    = 0                           ; no Freeze Mode
Sync_Mode_supp      = 0                           ; no Sync Mode
Auto_Baud_supp      = 1                           ; automatic baudrate
Set_Slave_Add_supp  = 0                           ; no addressing over BUS
Min_Slave_Intervall = 6                           ; min. slave-poll-cycle
Modular_Station     = 1                           ; modular concept
Redundancy          = 0
Repeater_Ctrl_Sig   = 0
24V_Pins            = 0

Max_Diag_Data_Len   = 30                          ;
Max_Module          = 40                          ;
Slave_Family        = 0                           ;
Max_Data_Len        = 246                         ;
Max_Input_Len       = 244                         ;
Max_Output_Len      = 2                           ;
```

```
;
; <Parameter-Definition-List>
;User_Prm_Data_Len = 4
;User_Prm_Data = 0x00,0x00,0x00,0x00
Max_User_Prm_Data_Len = 4
Ext_User_Prm_Data_Ref(3)=1

Module="device status (read and reset)"     0x91,0xA0      ; reset status with <> 0 in Outputdata
EndModule
Module="clear-commands"                     0xA0           ; Bit0: reserved
                                                           ; Bit1: reserved
                                                           ; Bit2: reset endless active work counter
consumption
                                                           ; Bit3: reset endless reactive work counter
consumption
                                                           ; Bit4: reserved
                                                           ; Bit5: reserved
                                                           ; Bit6: reserved
                                                           ; Bit7: reserved
EndModule

;       0123456789abcdef0123456789ABCDEF"                     Unit  Format        Size
Module="voltage PH-N L1-L3"                 0x41,0x8B,  1  ;  V     float         12
EndModule
Module="voltage PH-PH L1-L3"                0x41,0x8B,  2  ;  V     float         12
EndModule
Module="current L1-L3"                      0x41,0x8B,  3  ;  A     float         12
EndModule
Module="current average. L1-L3"             0x41,0x8B,  4  ;  A     float         12
EndModule
Module="apparent power L1-L3"              0x41,0x8B,  5  ;  kVA   float         12
EndModule
Module="active power L1-L3"                 0x41,0x8B,  6  ;  kW    float         12
EndModule
Module="reactive power (Q1) L1-L3"          0x41,0x8B,  7  ;  kvar  float         12
EndModule
Module="reactive power (Qn) L1-L3"          0x41,0x8B,  8  ;  kvar  float         12
EndModule
Module="cos Phi L1-L3"                      0x41,0x8B,  9  ;  -     float         12
EndModule
Module="powerfactor L1-L3"                  0x41,0x8B, 10  ;  -     float         12
EndModule
Module="max: voltage PH-N L1-L3"            0x41,0x8B, 11  ;  V     float         12
EndModule
Module="max: voltage PH-PH L1-L3"           0x41,0x8B, 12  ;  V     float         12
EndModule
Module="max: current L1-L3"                 0x41,0x8B, 13  ;  A     Float         12
EndModule
Module="max: current average. L1-L3"        0x41,0x8B, 14  ;  A     float         12
EndModule
Module="max: apparent power L1-L3"         0x41,0x8B, 15  ;  kVA   float         12
EndModule
Module="max: active power L1-L3"            0x41,0x8B, 16  ;  kW    float         12
EndModule
Module="max: reactive power (Q1) L1-L3"     0x41,0x8B, 17  ;  kvar  float         12
EndModule
Module="max: reactive power (Qn) L1-L3"     0x41,0x8B, 18  ;  kvar  float         12
EndModule
Module="max: cos Phi L1-L3"                 0x41,0x8B, 19  ;  -     float         12
EndModule
Module="max: powerfactor L1-L3"             0x41,0x8B, 20  ;  -     float         12
EndModule
Module="min: voltage PH-N L1-L3"            0x41,0x8B, 21  ;  V     float         12
EndModule
Module="min: voltage PH-PH L1-L3"           0x41,0x8B, 22  ;  V     float         12
EndModule
Module="min: current L1-L3"                 0x41,0x8B, 23  ;  A     Float         12
EndModule
Module="min: current average. L1-L3"        0x41,0x8B, 24  ;  A     float         12
EndModule
Module="min: apparent power L1-L3"         0x41,0x8B, 25  ;  kVA   float         12
EndModule
```

```
Module="min: active power L1-L3"           0x41,0x8B, 26  ;  kW    float         12
EndModule
Module="min: reactive power (Q1) L1-L3"    0x41,0x8B, 27  ;  kvar  float         12
EndModule
Module="min: reactive power (Qn) L1-L3"    0x41,0x8B, 28  ;  kvar  float         12
EndModule
Module="min: cos Phi L1-L3"                0x41,0x8B, 29  ;  -     float         12
EndModule
Module="min: powerfactor L1-L3"            0x41,0x8B, 30  ;  -     float         12
EndModule
Module="total apparent power"             0x41,0x83, 31  ;  kVA   float          4
EndModule
Module="total active power"                0x41,0x83, 32  ;  kW    float          4
EndModule
Module="total reactive power (Q1)"         0x41,0x83, 33  ;  kvar  float          4
EndModule
Module="zero conductor current"            0x41,0x83, 34  ;  A     float          4
EndModule
Module="average zero conductor current"    0x41,0x83, 35  ;  A     float          4
EndModule
Module="frequency"                         0x41,0x83, 36  ;  Hz    float          4
EndModule
Module="powerfactor"                       0x41,0x83, 37  ;  -     float          4
EndModule
Module="cum. 15 min active power"          0x41,0x83, 38  ;  kW    float          4
EndModule
Module="total reactive power (Qn)"         0x41,0x83, 39  ;  kvar  float          4
EndModule
Module="max:total apparent power"         0x41,0x83, 40  ;  kVA   float          4
EndModule
Module="max:total active power"            0x41,0x83, 41  ;  kW    float          4
EndModule
Module="max:total reactive power (Q1)"     0x41,0x83, 42  ;  kvar  float          4
EndModule
Module="max:zero conductor current"        0x41,0x83, 43  ;  A     float          4
EndModule
Module="max:average zero conductor current" 0x41,0x83, 44  ;  A     float          4
EndModule
Module="max:frequency"                     0x41,0x83, 45  ;  Hz    float          4
EndModule
Module="max:powerfactor"                   0x41,0x83, 46  ;  -     float          4
EndModule
Module="max:cum. 15 min active power"      0x41,0x83, 47  ;  kW    float          4
EndModule
Module="max:total reactive power (Qn)"     0x41,0x83, 48  ;  kvar  float          4
EndModule
Module="min:total apparent power"         0x41,0x83, 49  ;  kVA   float          4
EndModule
Module="min:total active power"            0x41,0x83, 50  ;  kW    float          4
EndModule
Module="min:total reactive power (Q1)"     0x41,0x83, 51  ;  kvar  float          4
EndModule
Module="min:zero conductor current"        0x41,0x83, 52  ;  A     float          4
EndModule
Module="min:average zero conductor current" 0x41,0x83, 53  ;  A     float          4
EndModule
Module="min:frequency"                     0x41,0x83, 54  ;  Hz    float          4
EndModule
Module="min:powerfactor"                   0x41,0x83, 55  ;  -     float          4
EndModule
Module="min:total reactive power (Qn)"     0x41,0x83, 56  ;  kvar  float          4
EndModule
Module="error status"                      0x41,0x83, 57  ;  -     unsigned long  4
EndModule
Module="active work consumption"           0x41,0x83, 58  ;  Wh    unsigned long  4
EndModule
Module="reactive work consumption"         0x41,0x83, 59  ;  varh  unsigned long  4
EndModule
```

8.2 Output data multimess 1F96-0-LED-ES-US1

2 modules exist with output data which can be used if required.
The status flags of the device can be read and deleted, various values such as extremes or meter counts can be reset and certain switching operations can be performed.

Module name	Configuration	Description
device status (read and reset)	0x91,0xA0	Output data byte <> 0: Deleting status bytes Input data 2 status bytes (see tables 3 and 4)
clear-commands	0xA0	Output data byte: Bit0: Reset of extreme values (only maxima) Bit1: Reset of extreme values (only minima) Bit2: Reset endless active energy counter HT/LT consumption Bit3: Reset endless reactive energy counter HT/LT consumption Bit4: Reset endless active energy counter HT/LT recovery (only for Comfort devices) Bit5: Reset endless reactive energy counter HT/LT recovery (only for Comfort devices) Bit 6 and 7: reserved

Table 8: Output data multimess 1F96-0-LED-ES-US1

The following table describes the meaning of the error flags.

Bit	Meaning
0	Power outage has occurred
1	Reserved
2	Reserved
3	Reserved
4	Reset has been performed
5	Reserved
6	Reserved
7	Reserved

Table 9: Error status high byte multimess 1F96-0-LED-ES-US1

Bit	Meaning
0	Rotating field error
1	Phase angle deviation
2	I-Dir (k and I of the current transformer were swapped)
3	Reserved
4	Reserved
5	Parameter error (default value replaces incorrect value)
6	Reserved
7	Reserved

Table 10: Error status low byte multimess 1F96-0-LED-ES-US1

8.3 Input data multimess 1F96-0-LED-ES-US1

The desired input data for the Profibus slave can be defined through any combination of the modules listed below.

Module name	Config.	Description	Unit	Format
voltage PH-N L1-L3	0x41,0x8B, 1	voltage PH-N L1	V	float
		voltage PH-N L2	V	float
		voltage PH-N L3	V	float
voltage PH-PH L1-L3	0x41,0x8B, 2	voltage PH-PH L1	V	float
		voltage PH-PH L2	V	float
		voltage PH-PH L3	V	float
current L1-L3	0x41,0x8B, 3	current L1	A	float
		current L2	A	float
		current L3	A	float
current average. L1-L3	0x41,0x8B, 4	current average L1	A	float
		current average L2	A	float
		current average L3	A	float
apparent power L1-L3	0x41,0x8B, 5	apparent power L1	kVA	float
		apparent power L2	kVA	float
		apparent power L3	kVA	float
active power L1-L3	0x41,0x8B, 6	active power L1	kW	float
		active power L2	kW	float
		active power L3	kW	float
reactive power L1-L3 (Q1)	0x41,0x8B, 7	1st harm. offset reactive power L1	kvar	float
		1st harm. offset reactive power L2	kvar	float
		1st harm. offset reactive power L3	kvar	float
reactive power L1-L3 (Qn)	0x41,0x8B, 8	Total reactive power L1	kvar	float
		Total reactive power L2	kvar	float
		Total reactive power L3	kvar	float
cos Phi L1-L3	0x41,0x8B, 9	cos Phi L1		float
		cos Phi L2		float
		cos Phi L3		float
power factor L1-L3	0x41,0x8B, 10	power factor L1		float
		power factor L2		float
		power factor L3		float
max: voltage PH-N L1-L3	0x41,0x8B, 11	Maximum: voltage PH-N L1	V	float
		Maximum: voltage PH-N L2	V	float
		Maximum: voltage PH-N L3	V	float
max: voltage PH-PH L1-L3	0x41,0x8B, 12	Maximum: voltage PH-PH L1	V	float
		Maximum: voltage PH-PH L2	V	float
		Maximum: voltage PH-PH L3	V	float
max: current L1-L3	0x41,0x8B, 13	Maximum: current L1	A	float
		Maximum: current L2	A	float
		Maximum: current L3	A	float

Table 11: Input data multimess 1F96-0-LED-ES-US1

EDEBDA0055 / 4210-1 GB

Module name	Config.	Description	Unit	Format
max: current average. L1-L3	0x41,0x8B, 14	Maximum: current average L1	A	float
		Maximum: current average L2	A	float
		Maximum: current average L3	A	float
max: apparent power L1-L3	0x41,0x8B, 15	Maximum: apparent power L1	kVA	float
		Maximum: apparent power L2	kVA	float
		Maximum: apparent power L3	kVA	float
max: active power L1-L3	0x41,0x8B, 16	Maximum: active power L1	kW	float
		Maximum: active power L2	kW	float
		Maximum: active power L3	kW	float
max: reactive power L1-L3 (Q1)	0x41,0x8B, 17	Maximum: 1st harm. reactive power L1	kvar	float
		Maximum: reactive power L2	kvar	float
		Maximum: reactive power L3	kvar	float
max: reactive power L1-L3 (Qn)	0x41,0x8B, 18	Maximum: Total reactive power L1	kvar	float
		Maximum: Total reactive power L2	kvar	float
		Maximum: Total reactive power L3	kvar	float
max: cos Phi L1-L3	0x41,0x8B, 19	Maximum: cos Phi L1		float
		Maximum: cos Phi L2		float
		Maximum: cos Phi L3		float
max: power factor L1-L3	0x41,0x8B, 20	Maximum: power factor L1		float
		Maximum: power factor L2		float
		Maximum: power factor L3		float
min: voltage PH-N L1-L3	0x41,0x8B, 21	Minimum: voltage PH-N L1	V	float
		Minimum: voltage PH-N L2	V	float
		Minimum: voltage PH-N L3	V	float
min: voltage PH-PH L1-L3	0x41,0x8B, 22	Minimum: voltage PH-PH L1	V	float
		Minimum: voltage PH-PH L2	V	float
		Minimum: voltage PH-PH L3	V	float
min: current L1-L3	0x41,0x8B, 23	Minimum: current L1	A	float
		Minimum: current L2	A	float
		Minimum: current L3	A	float
min: current average. L1-L3	0x41,0x8B, 24	Minimum: current average L1	A	float
		Minimum: current average L2	A	float
		Minimum: current average L3	A	float
min: apparent power L1-L3	0x41,0x8B, 25	Minimum: apparent power L1	kVA	float
		Minimum: apparent power L2	kVA	float
		Minimum: apparent power L3	kVA	float
min: active power L1-L3	0x41,0x8B, 26	Minimum: active power L1	kW	float
		Minimum: active power L2	kW	float
		Minimum: active power L3	kW	float
min: reactive power L1-L3 (Q1)	0x41,0x8B, 27	Minimum: 1st harm. reactive power L1	kvar	float
		Minimum: reactive power L2	kvar	float
		Minimum: reactive power L3	kvar	float
min: reactive power L1-L3 (Qn)	0x41,0x8B, 28	Minimum: Total reactive power L1	kvar	float
		Minimum: Total reactive power L2	kvar	float
		Minimum: Total reactive power L3	kvar	float

Table 11: Input data multimess 1F96-0-LED-ES-US1 (cont.)

Module name	Config.	Description	Unit	Format
min: cos Phi L1-L3	0x41,0x8B, 29	Minimum: cos Phi L1		float
		Minimum: cos Phi L2		float
		Minimum: cos Phi L3		float
min: power factor L1-L3	0x41,0x8B, 30	Minimum: power factor L1		float
		Minimum: power factor L2		float
		Minimum: power factor L3		float
total apparent power	0x41,0x83, 31	total apparent power	kVA	float
total active power	0x41,0x83, 32	total active power	kW	float
total reactive power (Q1)	0x41,0x83, 33	total reactive power	kvar	float
zero conductor current	0x41,0x83, 34	zero conductor current	A	float
average zero conductor current	0x41,0x83, 35	average zero conductor current	A	float
frequency	0x41,0x83, 36	Power frequency	Hz	float
power factor	0x41,0x83, 37	Power factor		float
cum. 15 min active power	0x41,0x83, 38	15 min cumulated active power	kW	float
total reactive power (Qn)	0x41,0x83, 39	total reactive power	kvar	float
max: total apparent power	0x41,0x83, 40	Maximum: total apparent power	kVA	float
max: total active power	0x41,0x83, 41	Maximum: total active power	kW	float
max: total reactive power (Q1)	0x41,0x83, 42	Maximum: total reactive power	kvar	float
max: zero conductor current	0x41,0x83, 43	Maximum: zero conductor current	A	float
max: avg zero conductor current	0x41,0x83, 44	Maximum: average zero conductor current	A	float
max: frequency	0x41,0x83, 45	Maximum: Power frequency	Hz	float
max: power factor	0x41,0x83, 46	Maximum: Power factor		float
max:cum. 15 min active power	0x41,0x83, 47	Maximum: 15 min cumulated active power	kW	float
max:total reactive power (Qn)	0x41,0x83, 48	Maximum: total reactive power	kvar	float
min: total apparent power	0x41,0x83, 49	Minimum: total apparent power	kVA	float
min: total active power	0x41,0x83, 50	Minimum: total active power	kW	float
min: total reactive power (Q1)	0x41,0x83, 51	Minimum: total reactive power	kvar	float
min: zero conductor current	0x41,0x83, 52	Minimum: zero conductor current	A	float
min: avg zero conductor current	0x41,0x83, 53	Minimum: average zero conductor current	A	float
min: frequency	0x41,0x83, 54	Minimum: Power frequency	Hz	float
min: power factor	0x41,0x83, 55	Minimum: Power factor		float
min:total reactive power (Qn)	0x41,0x83, 56	Minimum: total reactive power	kvar	float
error status	0x41,0x83, 57	error status		unsigned long
active work consumption	0x41,0x87, 58	active energy count (consumption)	Wh	float
reactive work consumption	0x41,0x87, 59	reactive energy count (consumption)	varh	float

Table 11: Input data multimess 1F96-0-LED-ES-US1 (cont.)

9 multicount basic LCD bus

9.1 GSD file for multicount basic LCD bus

```
;-----------------------------------------------------------------------------;
; GSD Multicount Energy Counter for PROFIBUS DP                               ;
; Fa. KBR GmbH, Am Kiefernschlag 7 , 91126 Schwabach                          ;
; Tel.: 09122/6373-0                                                          ;
; Date: 30.04.2004                                                           ;
;-----------------------------------------------------------------------------;

#Profibus_DP
; <Prm-Text-Def-List>
PrmText=1
Text(0)= "do not rotate float/REAL"
Text(1)= "rotate float/REAL"
EndPrmText
; <Ext-User-Prm-Data-Def-List>
ExtUserPrmData=1 "float/REAL byte rotation"
Bit(0) 0 0-1
Prm_Text_Ref=1
EndExtUserPrmData
;

GSD_Revision        = 2

Vendor_Name         = "KBR GmbH, Schwabach"       ; company name
Model_Name          = "Multicount Basic"          ; device name
Revision            = "1.0"                       ; device release
Ident_Number        = 0x08F8                      ; Ident number
Protocol_Ident      = 0                           ; PROFIBUS_DP Record
Station_Type        = 0                           ; slave station

Hardware_Release    = "V1.0"                      ;
Software_Release    = "V1.00"                     ;

9.6_supp            = 1                           ; Baudrate 9.6kB supported
19.2_supp            = 1                           ; Baudrate 19.2kB supported
93.75_supp            = 1                           ; Baudrate 93.75kB supported
187.5_supp            = 1                           ; Baudrate 187.5kB supported
500_supp            = 1                           ; Baudrate 500kB supported
1.5M_supp           = 1                           ; Baudrate 1.5MB supported
3M_supp             = 1                           ; Baudrate 3MB supported
6M_supp             = 1                           ; Baudrate 6MB supported
12M_supp            = 1                           ; Baudrate 12 MB supported

MaxTsdr_9.6         = 60
MaxTsdr_19.2        = 60
MaxTsdr_93.75       = 60
MaxTsdr_187.5       = 60
MaxTsdr_500         = 100
MaxTsdr_1.5M        = 150
MaxTsdr_3M          = 250
MaxTsdr_6M          = 450
MaxTsdr_12M         = 800

Freeze_Mode_supp    = 0                           ; no Freeze Mode
Sync_Mode_supp      = 0                           ; no Sync Mode
Auto_Baud_supp      = 1                           ; automatic baudrate
Set_Slave_Add_supp  = 0                           ; no addressing over BUS
Min_Slave_Interval = 6                           ; min. slave-poll-cycle
Modular_Station     = 1                           ; modular concept
Redundancy          = 0
Repeater_Ctrl_Sig   = 0
24V_Pins            = 0

Max_Diag_Data_Len   = 30                          ;
Max_Module          = 32                          ;
Slave_Family        = 0                           ;
Max_Data_Len        = 247                         ;
Max_Input_Len       = 244                         ;
```

```
Max_Output_Len      = 3                          ;

;
; <Parameter-Definition-List>
;User_Prm_Data_Len = 4
;User_Prm_Data = 0x00,0x00,0x00,0x00
Max_User_Prm_Data_Len = 4
Ext_User_Prm_Data_Ref(3)=1

Module="device status (read and reset)"     0x91,0xA0      ; reset status with <> 0 in Outputdata
EndModule
Module="clear-commands"                     0xA0           ; Bit0: reserved
                                                           ; Bit1: reserved
                                                           ; Bit2: reset endless active work counter HT/
LT consumption
                                                           ; Bit3: reset endless reactive work counter
HT/LT consumption
                                                           ; Bit4: reset endless active work counter HT/
LT supply
                                                           ; Bit5: reset endless reactive work counter
HT/LT supply
                                                           ; Bit6: reserved
                                                           ; Bit7: reserved
EndModule
Module="switch-commands"                    0x20           ; Bit0: switch to HT (bit must go from 0 to 1)
                                                           ; Bit1: switch to LT (bit must go from 0 to 1)
                                                           ; Bit2: reserved
                                                           ; Bit3: reserved
                                                           ; Bit4: reserved
                                                           ; Bit5: reserved
                                                           ; Bit6: reserved
                                                           ; Bit7: reserved
EndModule
;       0123456789abcdef0123456789ABCDEF"                     Unit  Format        Size
Module="voltage PH-N L1-L3"                 0x41,0x8B,  1  ;  V     float         12
EndModule
Module="voltage PH-PH L1-L3"                0x41,0x8B,  2  ;  V     float         12
EndModule
Module="current L1-L3"                      0x41,0x8B,  3  ;  A     float         12
EndModule
Module="current average. L1-L3"             0x41,0x8B,  4  ;  A     float         12
EndModule
Module="apparent power L1-L3"              0x41,0x8B,  5  ;  VA    float         12
EndModule
Module="active power L1-L3"                 0x41,0x8B,  6  ;  W     float         12
EndModule
Module="reactive power L1-L3"               0x41,0x8B,  7  ;  var   float         12
EndModule
Module="cos Phi L1-L3"                      0x41,0x8B,  8  ;  -     float         12
EndModule
Module="total apparent power"              0x41,0x83,  9  ;  VA    float          4
EndModule
Module="total active power"                 0x41,0x83, 10  ;  W     float          4
EndModule
Module="total reactive power"               0x41,0x83, 11  ;  var   float          4
EndModule
Module="powerfactor"                        0x41,0x83, 12  ;  -     float          4
EndModule
Module="time"                               0x41,0x83, 13  ;  -     unsigned long  4
EndModule
Module="energyform synchronous pulse"           0x41,0x83, 14  ;  -     unsigned long  4
EndModule
Module="tariff index"                       0x41,0x83, 15  ;  -     unsigned long  4
EndModule
Module="act.period value P consumption"     0x41,0x83, 16  ;  W     float          4
EndModule
Module="act.period value Q consumption"     0x41,0x83, 17  ;  var   float          4
EndModule
Module="act.period value P recovery"        0x41,0x83, 18  ;  W     float          4
EndModule
Module="act.period value Q recovery"        0x41,0x83, 19  ;  var   float          4
EndModule
```

```
Module="inst.period value P consumption"     0x41,0x83, 20  ;  W     float          4
EndModule
Module="inst.period value Q consumption"     0x41,0x83, 21  ;  var   float          4
EndModule
Module="inst.period value P recovery"        0x41,0x83, 22  ;  W     float          4
EndModule
Module="inst.period value Q recovery"        0x41,0x83, 23  ;  var   float          4
EndModule
Module="time to finish period"              0x41,0x83, 24  ;  s     unsigned long  4
EndModule
Module="period time"                        0x41,0x83, 25  ;  min   unsigned long  4
EndModule
Module="act. work HT/LT consumption"        0x41,0x87, 26  ;  Wh    float          8
EndModule
Module="react. work HT/LT cons."            0x41,0x87, 27  ;  varh  float          8
EndModule
Module="act. work HT/LT recovery"           0x41,0x87, 28  ;  Wh    float          8
EndModule
Module="react. work HT/LT recovery"         0x41,0x87, 29  ;  varh  float          8
EndModule
Module="error status"                       0x41,0x83, 30  ;  -     unsigned long  4
EndModule
```

9.2 Output data multicount basic LCD bus

3 modules exist with output data which can be used if required.
The status flags of the device can be read and deleted, various values such as extremes or meter counts can be reset and certain switching operations can be performed.

Module name	Configuration	Description
device status (read and reset)	0x91,0xA0	Output data byte <> 0: Deleting status bytes Input data 2 status bytes (see tables 3 and 4)
clear-commands	0xA0	Output data byte: Bit0: Reserved Bit1: Reserved Bit2: Reset endless active energy counter HT/LT consumption Bit3: Reset endless reactive energy counter HT/LT consumption Bit4: Reset endless active energy counter HT/LT recovery Bit5: Reset endless reactive energy counter HT/LT recovery Bit 6 and 7: reserved
switch-commands	0x20	Bit0: to high tariff (bit must change from 0 to 1) Bit1: to low tariff (bit must change from 0 to 1) Bits 2,3,4,5,6 and 7: reserved

Table 12: Output data multicount basic LCD bus

The following table describes the meaning of the error flags.

Bit	Meaning
0	Power outage has occurred
1	A limiting value has been violated
2	Reserved
3	External synchronous pulse is missing
4	Reset has been performed
5	Reserved
6	Reserved
7	Reserved

Table 13: Error status high byte multicount basic LCD bus

If the device is operated with an external synchronous pulse, BIT3 is set if the external synchronous pulse was not available when a period value was saved.
In general, all global error-BITS set are reset by the master.

Bit	Meaning
0	Rotating field error
1	Phase angle deviation
2	I-Dir (k and I of the current transformer were interchanged)
3	Set pulse length for the pulse output is not possible
4	Battery voltage critical
5	Parameter error (default value replaces incorrect value)
6	Reserved
7	Reserved

Table 14: Error status low byte multicount basic LCD bus

9.3 Input datamulticount basic LCD bus

The desired input data for the Profibus slave can be defined through any combination of the modules listed below.

Module name	Config.	Description	Unit	Format
voltage PH-N L1-L3	0x41,0x8B, 1	voltage PH-N L1 voltage PH-N L2 voltage PH-N L3	V V V	float float float
voltage PH-PH L1-L3	0x41,0x8B, 2	voltage PH-PH L1 voltage PH-PH L2 voltage PH-PH L3	V V V	float float float
current L1-L3	0x41,0x8B, 3	current L1 current L2 current L3	A A A	float float float
current average. L1-L3	0x41,0x8B, 4	current average L1 current average L2 current average L3	A A A	float float float
apparent power L1-L3	0x41,0x8B, 5	apparent power L1 apparent power L2 apparent power L3	VA VA VA	float float float
active power L1-L3	0x41,0x8B, 6	active power L1 active power L2 active power L3	W W W	float float float
reactive power L1-L3	0x41,0x8B, 7	reactive power L1 reactive power L2 reactive power L3	var var var	float float float
cos Phi L1-L3	0x41,0x83, 8	cos Phi L1 cos Phi L2 cos Phi L3		float float float
total apparent power	0x41,0x83, 9	total apparent power	VA	float
total active power	0x41,0x83, 10	total active power	W	float
total reactive power	0x41,0x83, 11	total reactive power	var	float
power factor	0x41,0x83, 12	power factor		float
time	0x41,0x83, 13	time		unsigned long
energyform synchronous pulse	0x41,0x83, 14	energy form of the synchronous pulse		unsigned long
tariff index	0x41,0x83, 15	tariff index		unsigned long
act.period value P consumption	0x41,0x83, 16	current period active power consumption	W	float
act.period value Q consumption	0x41,0x83, 17	current period reactive power consumption	var	float
act.period value P recovery	0x41,0x83, 18	current period active power recovery	W	float
act.period value Q recovery	0x41,0x83, 19	current period reactive power recovery	var	float

Table 15: Input data multicount basic LCD bus

Module name	Config.	Description	Unit	Format
inst.period value P consumption	0x41,0x83, 20	current period active power consumption	W	float
inst.period value Q consumption	0x41,0x83, 21	current period reactive power consumption	var	float
inst.period value P recovery	0x41,0x83, 22	current period active power recovery	W	float
inst.period value Q recovery	0x41,0x83, 23	current period reactive power recovery	var	float
time to finish period	0x41,0x83, 24	remaining cycle time	s	unsigned long
period time	0x41,0x83, 25	period length	min	unsigned long
act. work HT/LT consumption	0x41,0x87, 26	active energy counter (HT/ consumption) active energy counter (LT/ consumption)	Wh Wh	float float
react. work HT/LT cons.	0x41,0x87, 27	reactive energy counter (HT/ consumption) reactive energy counter (LT/ consumption)	varh varh	float float
act. work HT/LT recovery	0x41,0x87, 28	active energy counter (HT/recovery) active energy counter (LT/recovery)	Wh Wh	float float
react. work HT/LT recovery	0x41,0x87, 29	reactive energy HT/recovery reactive energy (LT/recovery)	varh varh	float float
error status	0x41,0x83, 30	error status		unsigned long

Table 15: Input data multicount basic LCD bus (cont.)

10 Reactive energy controller BK12 Basic

10.1 GSD file for BK12 Basic

```
;---------------------------------------------------------------------------;
; GSD BK12 reactive energy controller PROFIBUS DP                                ;
; Fa. KBR GmbH, Am Kiefernschlag 7 , 91126 Schwabach                          ;
; Tel.: 09122/6373-0                                                          ;
; Date: 30.04.2004                                                           ;
;---------------------------------------------------------------------------;

#Profibus_DP
; <Prm-Text-Def-List>
PrmText=1
Text(0)= "do not rotate float/REAL"
Text(1)= "rotate float/REAL"
EndPrmText
; <Ext-User-Prm-Data-Def-List>
ExtUserPrmData=1 "float/REAL byte rotation"
Bit(0) 0 0-1
Prm_Text_Ref=1
EndExtUserPrmData
;

GSD_Revision        = 2

Vendor_Name         = "KBR GmbH, Schwabach"       ; company name
Model_Name          = "BK12 reactive energy controller" ; device name
Revision            = "1.0"                       ; device release
Ident_Number        = 0x08E0                      ; Ident number
Protocol_Ident      = 0                           ; PROFIBUS_DP Record
Station_Type        = 0                           ; slave station

Hardware_Release    = "V1.0"                      ;
Software_Release    = "V1.00"                     ;

9.6_supp            = 1                           ; Baudrate 9.6kB supported
19.2_supp            = 1                           ; Baudrate 19.2kB supported
93.75_supp            = 1                           ; Baudrate 93.75kB supported
187.5_supp            = 1                           ; Baudrate 187.5kB supported
500_supp            = 1                           ; Baudrate 500kB supported
1.5M_supp           = 1                           ; Baudrate 1.5MB supported
3M_supp             = 1                           ; Baudrate 3MB supported
6M_supp             = 1                           ; Baudrate 6MB supported
12M_supp            = 1                           ; Baudrate 12 MB supported

MaxTsdr_9.6         = 60
MaxTsdr_19.2        = 60
MaxTsdr_93.75       = 60
MaxTsdr_187.5       = 60
MaxTsdr_500         = 100
MaxTsdr_1.5M        = 150
MaxTsdr_3M          = 250
MaxTsdr_6M          = 450
MaxTsdr_12M         = 800

Freeze_Mode_supp    = 0                           ; no Freeze Mode
Sync_Mode_supp      = 0                           ; no Sync Mode
Auto_Baud_supp      = 1                           ; automatic baudrate
Set_Slave_Add_supp  = 0                           ; no addressing over BUS
Min_Slave_Interval = 6                           ; min. slave-poll-cycle
Modular_Station     = 1                           ; modular concept
Redundancy          = 0
Repeater_Ctrl_Sig   = 0
24V_Pins            = 0

Max_Diag_Data_Len   = 30                          ;
Max_Module          = 40                          ;
Slave_Family        = 0                           ;
Max_Data_Len        = 244                         ;
Max_Input_Len       = 244                         ;
```

```
Max_Output_Len      = 0                          ;

;
; <Parameter-Definition-List>
;User_Prm_Data_Len = 4
;User_Prm_Data = 0x00,0x00,0x00,0x00
Max_User_Prm_Data_Len = 4
Ext_User_Prm_Data_Ref(3)=1

;       0123456789abcdef0123456789ABCDEF"                     Unit  Format                  Size
Module="voltage after transformation"           0x41,0x83,  0       ;  V     float         4
EndModule
Module="current after transformation"           0x41,0x83,  1       ;  A     float         4
EndModule
Module="induced current after transformation"   0x41,0x83,  2       ;  A     float         4
EndModule
Module="power frequency"                        0x41,0x83,  3       ;  Hz    float         4
EndModule
Module="cabinet temperature"                    0x41,0x83,  4       ;  °C    float         4
EndModule
Module="compensation power"                     0x41,0x83,  5       ;  kvar  float         4
EndModule
Module="peak value compensation power"          0x41,0x83,  6       ;  kvar  float         4
EndModule
Module="switchable compensation power"          0x41,0x83,  7       ;  kvar  float         4
EndModule
Module="comp. power via induced curr. meas."    0x41,0x83,  8       ;  kvar  float         4
EndModule
Module="active power"                           0x41,0x83, 9        ;  -     float         4
EndModule
Module="reactive power"                         0x41,0x83, 10       ;  kvar  float         4
EndModule
Module="CosinusPhi"                             0x41,0x83, 11       ;  -     float         4
EndModule
Module="distortion factor voltage"              0x41,0x83, 12       ;  %     float         4
EndModule
Module="3rd harmonic voltage"                   0x41,0x83, 13       ;  %     float         4
EndModule
Module="5th harmonic voltage"                   0x41,0x83, 14       ;  %     float         4
EndModule
Module="7th harmonic voltage"                   0x41,0x83, 15       ;  %     float         4
EndModule
Module="9th harmonic voltage"                   0x41,0x83, 16       ;  %     float         4
EndModule
Module="11th harmonic voltage"                  0x41,0x83, 17       ;  %     float         4
EndModule
Module="13th harmonic voltage"                  0x41,0x83, 18       ;  %     float         4
EndModule
Module="Total harmonic current"                 0x41,0x83, 19       ;  A     float         4
EndModule
Module="3rd harmonic current"                   0x41,0x83, 20       ;  A     float         4
EndModule
Module="5th harmonic current"                   0x41,0x83, 21       ;  A     float         4
EndModule
Module="7th harmonic current"                   0x41,0x83, 22       ;  A     float         4
EndModule
Module="9th harmonic current"                   0x41,0x83, 23       ;  A     float         4
EndModule
Module="11th harmonic current"                  0x41,0x83, 24       ;  A     float         4
EndModule
Module="13th harmonic current"                  0x41,0x83, 25       ;  A     float         4
EndModule
Module="K1: Number switching operations (*10)"  0x41,0x83, 26       ;  -     unsigned long 4
EndModule
Module="K2: Number switching operations (*10)"  0x41,0x83, 27       ;  -     unsigned long 4
EndModule
Module="K3: Number switching operations (*10)"  0x41,0x83, 28       ;  -     unsigned long 4
EndModule
Module="K4: Number switching operations (*10)"  0x41,0x83, 29       ;  -     unsigned long 4
EndModule
Module="K5: Number switching operations (*10)"  0x41,0x83, 30       ;  -     unsigned long 4
EndModule
```

```
Module="K6: Number switching operations (*10)"   0x41,0x83, 31       ;  -     unsigned long  4
EndModule
Module="K7: Number switching operations (*10)"   0x41,0x83, 32       ;  -     unsigned long  4
EndModule
Module="K8: Number switching operations (*10)"   0x41,0x83, 33       ;  -     unsigned long  4
EndModule
Module="K9: Number switching operations (*10)"   0x41,0x83, 34       ;  -     unsigned long  4
EndModule
Module="K10: Number switching operations (*10)"   0x41,0x83, 35       ;  -     unsigned long 4
EndModule
Module="K11: Number switching operations (*10)"   0x41,0x83, 36       ;  -     unsigned long 4
EndModule
Module="K12: Number switching operations (*10)"   0x41,0x83, 37       ;  -     unsigned long 4
EndModule
Module="current relay states"                     0x41,0x83, 38       ;  -     unsigned long 4
EndModule
Module="error flags"                              0x41,0x83, 39       ;  -     unsigned long 4
EndModule
```

10.2 Output data BK12

No modules exist with output data, ie. data can only be retrieved via the Profibus.

10.3 Input data BK12

The desired input data for the Profibus slave can be defined through any combination of the modules listed below.

Module name	Config.	Description	Unit	Format
voltage after transformation	0x41,0x83, 0	voltage after transformation	V	float
current after transformation	0x41,0x83, 1	current after transformation	A	float
voltage after transformation	0x41,0x83, 2	voltage after transformation	A	float
power frequency	0x41,0x83, 3	Power frequency	Hz	float
cabinet temperature	0x41,0x83, 4	cabinet temperature	°C	float
compensation power	0x41,0x83, 5	compensation power	kvar	float
peak value compensation power	0x41,0x83, 6	peak value compensation power	kvar	float
switchable compensation power	0x41,0x83, 7	switchable compensation power	kvar	float
comp.power via induced power measurement	0x41,0x83, 8	compensation power via induced current measurement	kvar	float
active power	0x41,0x83, 9	active power	KW	float
reactive power	0x41,0x83, 10	reactive power	kvar	float
CosinusPhi	0x41,0x83, 11	CosinusPhi		float
voltage distortion factor	0x41,0x83, 12	voltage distortion factor	%	float
3rd harmonic voltage	0x41,0x83, 13	3rd harmonic voltage	%	float
5th harmonic voltage	0x41,0x83, 14	5th harmonic voltage	%	float
7th harmonic voltage	0x41,0x83, 15	7th harmonic voltage	%	float
9th harmonic voltage	0x41,0x83, 16	9th harmonic voltage	%	float
11th harmonic voltage	0x41,0x83, 17	11th harmonic voltage	%	float
13th harmonic voltage	0x41,0x83, 18	13th harmonic voltage	%	float
total harmonic current	0x41,0x83, 19	total harmonic current	A	float

Table 16: input data BK12

Module name	Config.	Description	Unit	Format
3rd harmonic current	0x41,0x83, 20	3rd harmonic current	A	float
5th harmonic current	0x41,0x83, 21	5th harmonic current	A	float
7th harmonic current	0x41,0x83, 22	7th harmonic current	A	float
9th harmonic current	0x41,0x83, 23	9th harmonic current	A	float
11th harmonic current	0x41,0x83, 24	11th harmonic current	A	float
13th harmonic current	0x41,0x83, 25	13th harmonic current	A	float
K1: Number switching operations (*10)	0x41,0x83, 26	K1: number of switching operations (*10)		unsigned long
K2: Number switching operations (*10)	0x41,0x83, 27	K2: number of switching operations (*10)		unsigned long
K3: Number switching operations (*10)	0x41,0x83, 28	K3: number of switching operations (*10)		unsigned long
K4: Number switching operations (*10)	0x41,0x83, 29	K4: number of switching operations (*10)		unsigned long
K5: Number switching operations (*10)	0x41,0x83, 30	K5: number of switching operations (*10)		unsigned long
K6: Number switching operations (*10)	0x41,0x83, 31	K6: number of switching operations (*10)		unsigned long
K7: Number switching operations (*10)	0x41,0x83, 32	K7: number of switching operations (*10)		unsigned long
K8: Number switching operations (*10)	0x41,0x83, 33	K8: number of switching operations (*10)		unsigned long
K9: Number switching operations (*10)	0x41,0x83, 34	K9: number of switching operations (*10)		unsigned long
K10: Number switching operations (*10)	0x41,0x83, 35	K10: number of switching operations (*10)		unsigned long
K11: Number switching operations (*10)	0x41,0x83, 36	K11: number of switching operations (*10)		unsigned long
K12: Number switching operations (*10)	0x41,0x83, 37	K12: number of switching operations (*10)		unsigned long
current relay states	0x41,0x83, 38	current relay states: Bits 0...12 = steps 1...12, Bit 12 = ventilator, Bit 13 = fault signal contact, Bit 14 = setpoint input		unsigned long

Table 16: input data BK12 (cont.)

Module name	Config.	Description	Unit	Format
error flags	0x41,0x83, 39	error flags, defined as follows: 0x0001 no measurement voltage 0x0002 no main current 0x0004 no induced current 0x0008 excess voltage 0x0010 excess current 0x0020 harmonic wave error 0x0040 temperature too high 0x0080 thermostat switch off 0x0100 no steps programmed 0x0200 wrong user parameters 0x0400 wrong system parameters 0x0800 defective stage power 0x1000 unit too small 0x2000 overcompensation 0x4000 emergency shutdown		unsigned long

Table 16: input data BK12 (cont.)

11 Reactive power controller multicomp 96 LCD bus

11.1 GSD file for multicomp 96 LCD bus

```
----------------------------------------------------------------------------;
; GSD MULTICOMP Compensation Controller for PROFIBUS DP                      ;
; Company KBR GmbH, Am Kiefernschlag 7 , 91126 Schwabach                         ;
; Tel.: 09122/6373-0                                                         ;
; Date: 26. Nov. 2008                                                       ;
;----------------------------------------------------------------------------;

#Profibus_DP
; <Prm-Text-Def-List>
PrmText=1
Text(0)= "do not rotate float/REAL"
Text(1)= "rotate float/REAL"
EndPrmText
; <Ext-User-Prm-Data-Def-List>
ExtUserPrmData=1 "float/REAL byte rotation"
Bit(0) 0 0-1
Prm_Text_Ref=1
EndExtUserPrmData
;

GSD_Revision        = 2

Vendor_Name         = "KBR GmbH, Schwabach"       ; company name
Model_Name          = "MULTICOMP Basic"           ; device name
Revision            = "1.0"                       ; device release
Ident_Number        = 0x0C09                      ; Ident number
Protocol_Ident      = 0                           ; PROFIBUS_DP Protokoll
Station_Type        = 0                           ; slave station

Hardware_Release    = "V1.0"                      ;
Software_Release    = "V1.00"                     ;

9.6_supp            = 1                           ; Baudrate 9.6kB supported
19.2_supp           = 1                           ; Baudrate 19.2kB supported
93.75_supp          = 1                           ; Baudrate 93.75kB supported
187.5_supp          = 1                           ; Baudrate 187.5kB supported
500_supp            = 1                           ; Baudrate 500kB supported
1.5M_supp           = 1                           ; Baudrate 1.5MB supported
3M_supp             = 1                           ; Baudrate 3MB supported
6M_supp             = 1                           ; Baudrate 6MB supported
12M_supp            = 1                           ; Baudrate 12 MB supported

MaxTsdr_9.6         = 60
MaxTsdr_19.2        = 60
MaxTsdr_93.75       = 60
MaxTsdr_187.5       = 60
MaxTsdr_500         = 100
MaxTsdr_1.5M        = 150
MaxTsdr_3M          = 250
MaxTsdr_6M          = 450
MaxTsdr_12M         = 800

Freeze_Mode_supp    = 0                           ; no Freeze Mode
Sync_Mode_supp      = 0                           ; no Sync Mode
Auto_Baud_supp      = 1                           ; automatic baudrate
Set_Slave_Add_supp  = 0                           ; no addressing over BUS
Min_Slave_Intervall = 6                           ; min. slave-poll-cycle
Modular_Station     = 1                           ; modular concept
Redundancy          = 0
Repeater_Ctrl_Sig   = 0
24V_Pins            = 0

Max_Diag_Data_Len   = 30                          ;
Max_Module          = 40                          ;
Slave_Family        = 0                           ;
Max_Data_Len        = 244                         ;
```

```
Max_Input_Len       = 244                       ;
Max_Output_Len      = 0                         ;
;
; <Parameter-Definition-List>
;User_Prm_Data_Len = 4
;User_Prm_Data = 0x00,0x00,0x00,0x00
Max_User_Prm_Data_Len = 4
Ext_User_Prm_Data_Ref(3)=1


;       0123456789abcdef0123456789ABCDEF"                    Unit  Format        Size
Module="voltage PH-N  L"                    0x41,0x83,  0  ;  V     float          4
EndModule
Module="voltage PH-PH L"                    0x41,0x83,  1  ;  V     float          4
EndModule
Module="apparent current L"                 0x41,0x83,  2  ;  A     float          4
EndModule
Module="apparent power L"                   0x41,0x83,  3  ;  VA    float          4
EndModule
Module="active power L"                     0x41,0x83,  4  ;  W     float          4
EndModule
Module="reactive power L"                   0x41,0x83,  5  ;  var   float          4
EndModule
Module="cos phi"                            0x41,0x83,  6  ;  -     float          4
EndModule
Module="lack of compensatory power"         0x41,0x83,  7  ;  var   float          4
EndModule
Module="actual target cos Phi"              0x41,0x83,  8  ;  -     float          4
EndModule
Module="switched stage power"               0x41,0x83,  9  ;  var   float          4
EndModule
Module="total stage power"                  0x41,0x83, 10  ;  var   float          4
EndModule
Module="total apparent power"               0x41,0x83, 11  ;  VA    float          4
EndModule
Module="total active power"                 0x41,0x83, 12  ;  W     float          4
EndModule
Module="total reactive power"               0x41,0x83, 13  ;  var   float          4
EndModule
Module="frequency"                          0x41,0x83, 14  ;  Hz    float          4
EndModule
Module="powerfactor"                        0x41,0x83, 15  ;  -     float          4
EndModule
Module="THD voltage"                        0x41,0x83, 16  ;  %     float          4
EndModule
Module="voltage 3.Harm"                     0x41,0x83, 17  ;  %     float          4
EndModule
Module="voltage 5.Harm"                     0x41,0x83, 18  ;  %     float          4
EndModule
Module="voltage 7.Harm"                     0x41,0x83, 19  ;  %     float          4
EndModule
Module="voltage 9.Harm"                     0x41,0x83, 20  ;  %     float          4
EndModule
Module="voltage 11.Harm"                    0x41,0x83, 21  ;  %     float          4
EndModule
Module="voltage 13.Harm"                    0x41,0x83, 22  ;  %     float          4
EndModule
Module="voltage 15.Harm"                    0x41,0x83, 23  ;  %     float          4
EndModule
Module="voltage 17.Harm"                    0x41,0x83, 24  ;  %     float          4
EndModule
Module="voltage 19.Harm"                    0x41,0x83, 25  ;  %     float          4
EndModule
Module="distortion-current"                 0x41,0x83, 26  ;  A     float          4
EndModule
Module="current 3.Harm"                     0x41,0x83, 27  ;  A     float          4
EndModule
Module="current 5.Harm"                     0x41,0x83, 28  ;  A     float          4
EndModule
Module="current 7.Harm"                     0x41,0x83, 29  ;  A     float          4
EndModule
Module="current 9.Harm"                     0x41,0x83, 30  ;  A     float          4
```

```
EndModule
Module="current 11.Harm"                    0x41,0x83, 31  ;  A     float          4
EndModule
Module="current 13.Harm"                    0x41,0x83, 32  ;  A     float          4
EndModule
Module="current 15.Harm"                    0x41,0x83, 33  ;  A     float          4
EndModule
Module="current 17.Harm"                    0x41,0x83, 34  ;  A     float          4
EndModule
Module="current 19.Harm"                    0x41,0x83, 35  ;  A     float          4
EndModule
Module="powerfactor 3-phase"                0x41,0x83, 36  ;  -     float          4
EndModule

Module="max. lack of compensatory power"    0x41,0x83, 37  ;  var   float          4
EndModule
Module="temperature cabinet 1"              0x41,0x83, 38  ;  -     float          4
EndModule
Module="temperature cabinet 2"              0x41,0x83, 39  ;  -     float          4
EndModule
Module="temperature cabinet 3"              0x41,0x83, 40  ;  -     float          4
EndModule
Module="temperature cabinet 4"              0x41,0x83, 41  ;  -     float          4
EndModule
Module="temperature cabinet 5"              0x41,0x83, 42  ;  -     float          4
EndModule
Module="temperature cabinet 6"              0x41,0x83, 43  ;  -     float          4
EndModule
Module="stage status"                       0x41,0x83, 44  ;  -     unsigned long  4
EndModule
Module="error status"                       0x41,0x83, 45  ;  -     unsigned long  4
EndModule
```

11.2 Output data multicomp 96 LCD bus

No modules exist with output data, ie. data can only be retrieved via the Profibus.

11.3 Input data multicomp 96 LCD bus

The desired input data for the Profibus slave can be defined through any combination of the modules listed below.

Module name	Config	Description	Unit	Format
voltage PH-N L	0x41,0x83, 0	Voltage PH-N L	V	float
voltage PH-PH L	0x41,0x83, 1	Voltage PH-PH L	A	float
apparent current L	0x41,0x83, 2	Apparent current	A	float
apparent power L	0x41,0x83, 3	Apparent power L	kVA	float
active power L	0x41,0x83, 4	Active power L	kW	float
reactive power L	0x41,0x83, 5	Reactive power L	kvar	float
cos Phi	0x41,0x83, 6	cos Phi		float
lack of compensatory power	0x41,0x83, 7	Insufficient compensation power	kvar	float
actual target cos Phi	0x41,0x83, 8	Current target cos Phi		float
switched stage power	0x41,0x83, 9	Switched stage power	kvar	float
total stage power	0x41,0x83, 10	Total stage power	kvar	float
total apparent power	0x41,0x83, 11	Total apparent power	kVA	float
total active power	0x41,0x83, 12	Total active power	kW	float
total reactive power	0x41,0x83, 13	Total reactive power	kvar	float
frequency	0x41,0x83, 14	Frequency	Hz	float

Table 17: Input data multicomp 96 LCD bus

EDEBDA0055 / 4210-1 GB

Module name	Config	Description	Unit	Format
power factor	0x41,0x83, 15	Power factor		float
THD voltage	0x41,0x83, 16	Total distortion factor	%	float
voltage 3rd harmonic	0x41,0x83, 17	3rd harmonic voltage	%	float
voltage 5th harmonic	0x41,0x83, 18	5th harmonic voltage	%	float
voltage 7th harmonic	0x41,0x83, 19	7th harmonic voltage	%	float
voltage 9th harmonic	0x41,0x83, 20	9th harmonic voltage	%	float
voltage 11th harmonic	0x41,0x83, 21	11th harmonic voltage	%	float
voltage 13th harmonic	0x41,0x83, 22	13th harmonic voltage	%	float
voltage 15th harmonic	0x41,0x83, 23	15th harmonic voltage	%	float
voltage 17th harmonic	0x41,0x83, 24	17th harmonic voltage	%	float
voltage 19th harmonic	0x41,0x83, 25	19th harmonic voltage	%	float
distortion current	0x41,0x83, 26	Harmonic current	A	float
current 3rd harmonic	0x41,0x83, 27	3rd harmonic current	A	float
current 5th harmonic	0x41,0x83, 28	5th harmonic current	A	float
current 7th harmonic	0x41,0x83, 29	7th harmonic current	A	float
current 9th harmonic	0x41,0x83, 30	9th harmonic current	A	float
current 11th harmonic	0x41,0x83, 31	11th harmonic current	A	float
current 13th harmonic	0x41,0x83, 32	13th harmonic current	A	float
current 15th harmonic	0x41,0x83, 33	15th harmonic current	A	float
current 17th harmonic	0x41,0x83, 34	17th harmonic current	A	float
current 19th harmonic)	0x41,0x83, 35	19th harmonic current	A	float
powerfactor 3-phase	0x41,0x83, 36	Power factor 3-phase		float
max. lack of compensatory power	0x41,0x83, 37	Max. insufficient compensation power	kvar	float
temperature cabinet 1	0x41,0x83, 38	Temperature cabinet 1	°C	float
temperature cabinet 2	0x41,0x83, 39	Temperature cabinet 2	°C	float
temperature cabinet 3	0x41,0x83, 40	Temperature cabinet 3	°C	float
temperature cabinet 4	0x41,0x83, 41	Temperature cabinet 4	°C	float
temperature cabinet 5	0x41,0x83, 42	Temperature cabinet 5	°C	float
temperature cabinet 6	0x41,0x83, 43	Temperature cabinet 6	°C	float
stage status	0x41,0x83, 44	Stage status		unsigned long

Table 17: Input data multicomp 96 LCD bus (cont.)

Module name	Config	Description	Unit	Format
error status	0x41,0x83, 45	Error flags, defined as follows: 0x0001 Operating cycles of a stage exceeded 0x0002 Phase relation deviation 0x0004 Current direction wrong 0x0008 Facility too small 0x0010 Battery level critical 0x0020 Parameter error 0x0040 Input overloaded 0x0080 More detailed error messages available 0x0100 Network failure 0x0200 Limit value violated 0x0400 Not assigned 0x0800 Not assigned 0x1000 Reset performed 0x2000 Not assigned 0x4000 Error message 0x0800 Not assigned		unsigned long

Table 17: Input data multicomp 96 LCD bus (cont.)

ERKLÄRUNG DER KONFORMITÄT
DECLARATION OF CONFORMITY
DÉCLARATION DE CONFORMITÉ

Wir
We/Nous

KBR GmbH Schwabach

(Name des Anbieters / supplier´s name / norm du fournisseur)

Am Kiefernschlag 7
D-91126 Schwabach

(Anschrift / address / addresse)

erklären in alleiniger Verantwortung, dass das (die) Produkt(e) /
declare under our sole responsibility that the product(s) / Déclarons sous notre seule responsabilité, ques le(s) produit(s)

multisys 1D3-ESDP

(Bezeichnung, Typ oder Modell oder Seriennummer / name, type or model or serial number / nom, type ou modèle, N° de lot ou de série)

mit folgenden Europäischen Richtlinien übereinstimmt (übereinstimmen)
is (are) in conformity with the following directives / Répondet(ent) aux directives suivantes

Niederspannungsrichtline Nr.	EMV-Richtlinie Nr.
Low Voltage Directive No. Directive Basse Tension N°	EMV Directive No. EMV Directive N°
2006/95/EG 2006/95/EC 2006/95/CE	**2004/108/EG** 2004/108/EC 2004/108/CE

Dies wird nachgewiesen durch die Einhaltung folgender Norm(en)
This is documented by the accordance with the following standard(s) / Justifié par le respect de la (des) norme(s) suivante(s)

DIN EN 61010-1:2002;
DIN EN 61010-1/B1:2002
DIN EN 61010-1/B2:2004

DIN EN 61000-6-1:2007
DIN EN 61000-6-2:2006
DIN EN 61000-6-3:2007
DIN EN 61000-6-4:2007

(Titel und/oder Nr. sowie Ausgabedatum der Norm(en)
Title and/or number and date of issue of the standard(s)
Titre et/ou numéro et date d´édition de la (des) norme(s)

CE

Schwabach, 18.10.2010
(Ort und Datum der Ausstellung
Place and date of issue
Lieu et date de l´édition)

Geschäftsführer
General manager

© KBR GmbH EDEAAW0055_1710-1_DE_Erklärung der Konformität_allgemein

An
KBR GmbH
Abteilung Entwicklung
Am Kiefernschlag 7
D-91126 Schwabach

To
KBR GmbH
Development
Am Kiefernschlag 7
D-91126 Schwabach / Germany

Vorschläge:
Korrekturen:
Betrifft Gerät:

Suggestions:
Corrections:
Device concerned

Sollten Sie beim Lesen dieser Bedienungsanleitung oder Druckschrift auf Druckfehler gestoßen sein, bitten wir Sie, uns diese mitzuteilen. Ebenso freuen wir uns natürlich über Anregungen, Hinweise oder Verbesserungsvorschläge.

Bitte geben Sie die betreffende Anleitung oder Druckschrift mit Versionsnummer und/oder Ausgabestand an.

If you come across misprints in this user manual or printed material, please take the time to notify us. We will also be glad to hear your ideas, notes and suggestions for improvement.

Please identify the user manual or printed material in question with version number and/or revision number.

Absender / Sender:

Name:
Firma/Dienststelle, / Copany/Department:
Anschrift / Address:
Telefon / Phone:
Telefax / Fax:
email:

Korrekturvorschläge zur Bedienungsanleitung / Druckschrift

Corrections/Suggestions for user manual / Printed material

Version

1309-1 DE / GB